REV.	DESCRIPTION	DRAWN	CHECKED	APPROVED
A	NEW RELEASE	ZQJ 11/18/2015	~	ZQJ 11/18/2015
B	ADD P/N CODE	CJJ 11/18/2015	~	CJJ 11/18/2015

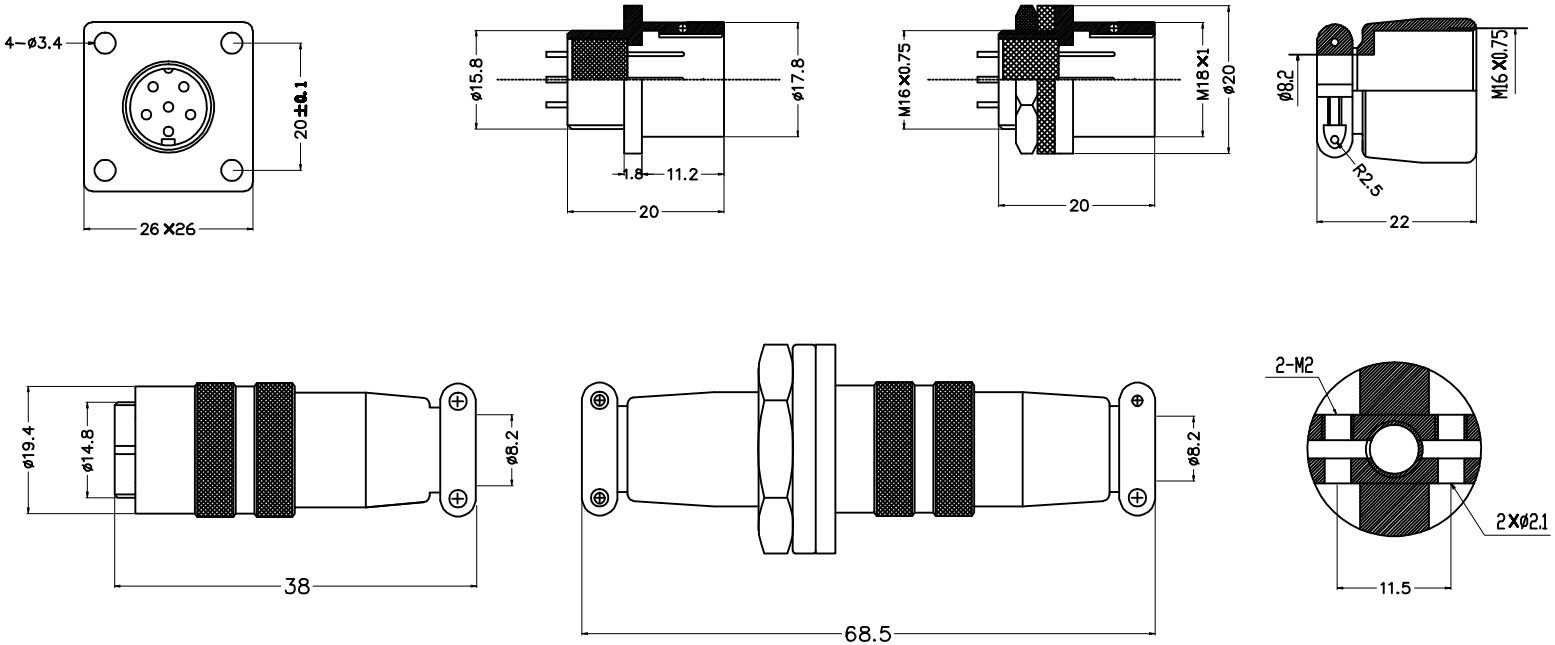

外形尺寸 Shell size	XS16-2	XS16-3	XS16-4	XS16-5	XS16-6	XS16-7	XS16-9
插针 插孔							
接触件排列 Contact Arrangements							
额定电流/电压 Current rating/voltage	5A	5A	5A	5A	5A	5A	5A
耐压电压 Dielectrical voltage	AC800V a minute	AC800V a minute	AC800V a minute	AC800V a minute	AC800V a minute	AC800V a minute	AC800V a minute
绝缘电阻 Insulation resistance	) 5000M Ω	) 5000M Ω	) 5000M Ω	) 5000M Ω	) 5000M Ω	) 5000M Ω	) 5000M Ω
接触电阻 Contact resistance	(10M Ω	(10M Ω	(10M Ω	(10M Ω	(10M Ω	(10M Ω	(10M Ω

XS16 系列 2T-9T

GENERAL TOLERANCE		ANGLE TOLERANCE	
X.	±0.60	X.	±5°
.X	±0.38	.X	±3°
.XX	±0.25	.XX	±2°

PROJECTION		TITLE	XS16 Micro Jack Connector
UNITS	mm		
SHEET SIZE	A4	SERIES	XS16

ITEM	PART NAME
2	CONTACT
1	HOUSING

DRAWING TYPE	CUSTOMER		
SCALE	1:1	SHEET	1 OF 1
DRAWING NO.			

LANL 蓝翎电子

慈溪蓝翎电子有限公司
CIXI LANLING ELECTRONICS CO., LTD.